International Standard

ISO 22872

First edition
2024-11

Rolling bearings — Geometrical product specifications (GPS) — Vocabulary and representation of symbols

Roulements — Spécification géométrique des produits (GPS) — Vocabulaire et représentation des symboles

STANDARDSISO.COM : Click to view the full PDF of ISO 22872:2024

Reference number
ISO 22872:2024(en)

© ISO 2024

STANDARDSISO.COM : Click to view the full PDF of ISO 22872:2024

COPYRIGHT PROTECTED DOCUMENT

© ISO 2024

All rights reserved. Unless otherwise specified, or required in the context of its implementation, no part of this publication may be reproduced or utilized otherwise in any form or by any means, electronic or mechanical, including photocopying, or posting on the internet or an intranet, without prior written permission. Permission can be requested from either ISO at the address below or ISO's member body in the country of the requester.

ISO copyright office
CP 401 • Ch. de Blandonnet 8
CH-1214 Vernier, Geneva
Phone: +41 22 749 01 11
Email: copyright@iso.org
Website: www.iso.org

Published in Switzerland

Contents

Page

Foreword ... **iv**
Introduction ... **v**
1 Scope ... **1**
2 Normative references ... **1**
3 Terms and definitions ... **1**
3.1 Terms related to dimensional specifications ... 1
3.1.1 Nominal boundary dimensions ... 1
3.1.2 Bore diameter ... 3
3.1.3 Outside diameter ... 4
3.1.4 Widths of inner and outer rings ... 5
3.1.5 Washer thickness ... 6
3.1.6 Assembled bearing section height ... 7
3.1.7 Assembled bearing height or width ... 7
3.2 Terms related to geometrical specifications ... 8
3.2.1 Rings ... 8
3.2.2 Assembled radial bearings ... 8
3.3 Terms related to geometrical product specifications ... 9
4 Symbols ... **10**
4.1 General ... 10
4.2 Symbols for physical quantities ... 10
4.3 Additional symbols ... 11
5 Graphic description ... **12**
Annex A (informative) **Representation of geometrical product specifications** ... **15**
Bibliography ... **25**

STANDARDSISO.COM : Click to view the full PDF of ISO 22872:2024

© ISO 2024 – All rights reserved

Foreword

ISO (the International Organization for Standardization) is a worldwide federation of national standards bodies (ISO member bodies). The work of preparing International Standards is normally carried out through ISO technical committees. Each member body interested in a subject for which a technical committee has been established has the right to be represented on that committee. International organizations, governmental and non-governmental, in liaison with ISO, also take part in the work. ISO collaborates closely with the International Electrotechnical Commission (IEC) on all matters of electrotechnical standardization.

The procedures used to develop this document and those intended for its further maintenance are described in the ISO/IEC Directives, Part 1. In particular, the different approval criteria needed for the different types of ISO document should be noted. This document was drafted in accordance with the editorial rules of the ISO/IEC Directives, Part 2 (see www.iso.org/directives).

ISO draws attention to the possibility that the implementation of this document may involve the use of (a) patent(s). ISO takes no position concerning the evidence, validity or applicability of any claimed patent rights in respect thereof. As of the date of publication of this document, ISO had not received notice of (a) patent(s) which may be required to implement this document. However, implementers are cautioned that this may not represent the latest information, which may be obtained from the patent database available at www.iso.org/patents. ISO shall not be held responsible for identifying any or all such patent rights.

Any trade name used in this document is information given for the convenience of users and does not constitute an endorsement.

For an explanation of the voluntary nature of standards, the meaning of ISO specific terms and expressions related to conformity assessment, as well as information about ISO's adherence to the World Trade Organization (WTO) principles in the Technical Barriers to Trade (TBT), see www.iso.org/iso/foreword.html.

This document was prepared by Technical Committee ISO/TC 4, *Rolling bearings*, Subcommittee SC 4, *Rolling bearings - Vocabulary, boundary dimensions and geometrical product specifications.*

Any feedback or questions on this document should be directed to the user's national standards body. A complete listing of these bodies can be found at www.iso.org/members.html.

STANDARDSISO.COM : Click to view the full PDF of ISO 22872:2024

© ISO 2024 – All rights reserved

Introduction

This document provides supportive references for associated rolling bearing International Standards that have been technically revised to introduce geometrical product specifications (GPS), especially ISO 199[3] and ISO 492[5]. This document replaces the role of ISO 1132-1[8] for terms and definitions in the field of rolling bearings.

This document keeps the existing symbols associated with rolling bearings because they are widely used in the market. The new terms for the symbols are as close as possible to the preceding long-standing traditional terms to facilitate the transition. In some cases, new terms are derived from the full GPS definition. The definitions of the established terms and symbols are necessarily changed according to the GPS rules.

Annex A shows the representation of geometrical product specifications in technical drawings and tables. Some examples are shown in Figures A.6 to A.16.

STANDARDSISO.COM : Click to view the full PDF of ISO 22872:2024

© ISO 2024 – All rights reserved

STANDARDSISO.COM : Click to view the full PDF of ISO 22872:2024

Rolling bearings — Geometrical product specifications (GPS) — Vocabulary and representation of symbols

1 Scope

This document defines common terms and symbols associated with geometrical product specifications (GPS) for use in the field of rolling bearings. This document gives requirements and recommendations on the transformation of GPS into figures and tables. This document includes the rules for the representation of symbols, tolerance values, limits of size, limit deviations and limit values for rolling bearings derived from GPS indications according to, for example, ISO 1101[7] and ISO 14405-1[13], including indications in textual documents and on technical drawings.

2 Normative references

There are no normative references in this document.

3 Terms and definitions

ISO and IEC maintain terminology databases for use in standardization at the following addresses:

— ISO Online browsing platform: available at https://www.iso.org/obp

— IEC Electropedia: available at https://www.electropedia.org/

3.1 Terms related to dimensional specifications

3.1.1 Nominal boundary dimensions

3.1.1.1
nominal inner ring width
B
distance between the two theoretical side faces of an inner ring

3.1.1.2
nominal outer ring width
C
distance between the two theoretical side faces of an outer ring

3.1.1.3
nominal outer ring flange width
C_1
distance between the two theoretical side faces of an outer ring flange

3.1.1.4
nominal outside diameter
D
<cylindrical outside surface> diameter of the cylinder containing the theoretical outside surface

3.1.1.5
nominal outside diameter of outer ring flange
D_1
diameter of the cylinder containing the theoretical outside surface of a flanged outer ring

STANDARDSISO.COM : Click to view the full PDF of ISO 22872:2024

© ISO 2024 – All rights reserved

3.1.1.6
nominal bore diameter
d
<cylindrical bore> diameter of the cylinder containing the theoretical bore surface

3.1.1.7
nominal bore diameter
d
<tapered bore> diameter, in a designated radial plane of the cone, containing the theoretical bore surface at the theoretical small end of an inner ring tapered bore

3.1.1.8
nominal bore diameter at the theoretical large end
d_1
<tapered bore> diameter, in a designated radial plane of the cone, containing the theoretical bore surface at the theoretical large end of an inner ring tapered bore

3.1.1.9
nominal bore diameter of central shaft washer
d_2
<cylindrical bore> diameter of the cylinder containing the theoretical bore surface of a central shaft washer

3.1.1.10
nominal assembled bearing height
T
<single-direction thrust bearing> distance between the two theoretical washer back faces of an *assembled bearing* (3.3.9)

3.1.1.11
nominal assembled bearing width
T
<tapered roller bearing> distance between the two theoretical back faces of an *assembled bearing* (3.3.9)

3.1.1.12
nominal assembled bearing height
T_1
<double-direction thrust bearing> distance between the two theoretical washer back faces of an *assembled bearing* (3.3.9)

3.1.1.13
nominal effective width of inner subunit with master outer ring
T_1
<tapered roller bearing> distance between the theoretical back face of an inner subunit and the theoretical reference face of a master outer ring

3.1.1.14
nominal effective width of outer ring with master inner subunit
T_2
<tapered roller bearing> distance between the theoretical back face of an outer ring and the theoretical reference face of a master inner subunit

3.1.1.15
nominal width of a flanged bearing
T_F
distance between the theoretical flange back face of an outer ring and the theoretical inner ring back face of an *assembled* flanged *bearing* (3.3.9)

STANDARDSISO.COM : Click to view the full PDF of ISO 22872:2024

© ISO 2024 – All rights reserved

3.1.1.16
nominal effective width of flanged outer ring with master inner subunit
T_{F2}
distance between the theoretical back face of a flanged outer ring and the theoretical reference face of a master inner subunit

3.1.1.17
nominal tapered slope
S_L
difference between the nominal bore diameter at the theoretical large end and the theoretical small end of an inner ring tapered bore

3.1.2 Bore diameter

3.1.2.1
range of mid-range bore diameter
V_{dmp}
range of sizes (3.3.6) derived from *mid-range sizes* (3.3.5) of bore diameters [out of *two-point size* (3.3.1) bore diameters] obtained in any cross-section of an inner ring cylindrical bore

Note 1 to entry: For more information about any cross-section, see ISO 14405-1:2016, 7.4[13].

3.1.2.2
range of bore diameter
V_{dsp}
range of sizes (3.3.6) derived from *two-point sizes* (3.3.1) of bore diameters in any cross-section of an inner ring or shaft washer cylindrical or tapered bore

Note 1 to entry: For more information about any cross-section, see ISO 14405-1:2016, 7.4[13].

3.1.2.3
range of central shaft washer bore diameter
V_{d2sp}
range of sizes (3.3.6) derived from *two-point sizes* (3.3.1) of bore diameters in any cross-section of a central shaft washer cylindrical bore of double-direction thrust bearing

Note 1 to entry: For more information about any cross-section, see ISO 14405-1:2016, 7.4[13].

3.1.2.4
deviation of bore diameter
Δ_{ds}
deviation (3.3.7) of a *two-point size* (3.3.1) bore diameter of an inner ring cylindrical bore

3.1.2.5
deviation of mid-range bore diameter
Δ_{dmp}
<cylindrical bore> *deviation* (3.3.7) of the *mid-range size* (3.3.5) bore diameter [out of *two-point size* (3.3.1) bore diameters] in any cross-section of an inner ring or shaft washer cylindrical bore

Note 1 to entry: For more information about any cross-section, see ISO 14405-1:2016, 7.4[13].

3.1.2.6
deviation of mid-range bore diameter
Δ_{dmp}
<tapered bore> *deviation* (3.3.7) of the *mid-range size* (3.3.5) bore diameter [out of *two-point size* (3.3.1) bore diameters] in a specific fixed cross-section at the theoretical small end of an inner ring tapered bore

Note 1 to entry: For more information about the specific fixed cross-section, see ISO 14405-1:2016, 7.5[13].

STANDARDSISO.COM : Click to view the full PDF of ISO 22872:2024

© ISO 2024 – All rights reserved

3.1.2.7
deviation of mid-range bore diameter at large end
Δ_{d1mp}
<tapered bore> *deviation* (3.3.7) of the *mid-range size* (3.3.5) bore diameter [out of *two-point size* (3.3.1) bore diameters] in a specific fixed cross-section at the theoretical large end of an inner ring tapered bore

Note 1 to entry: For more information about the specific fixed cross-section, see ISO 14405-1:2016, 7.5[13].

3.1.2.8
deviation of mid-range central shaft washer bore diameter
Δ_{d2mp}
deviation (3.3.7) of the *mid-range size* (3.3.5) bore diameter [out of *two-point size* (3.3.1) bore diameters] in any cross-section of a central shaft washer cylindrical bore

Note 1 to entry: For more information about any cross-section, see ISO 14405-1:2016, 7.4[13].

3.1.2.9
deviation of tapered slope
Δ_{SL}
deviation (3.3.7) of *tapered slope* (3.1.1.17) of an inner ring tapered bore

Note 1 to entry: Deviation for tapered slope fulfils Formula (1):

$$\Delta_{SL} = \Delta_{d1mp} - \Delta_{dmp} \quad (1)$$

3.1.3 Outside diameter

3.1.3.1
range of mid-range outside diameter
V_{Dmp}
range of sizes (3.3.6) derived from *mid-range sizes* (3.3.5) of outside diameters (out of *two-point size* (3.3.1) outside diameters) obtained in any cross-section of an outer ring cylindrical outside surface

Note 1 to entry: For more information about any cross-section, see ISO 14405-1:2016, 7.4[13].

3.1.3.2
range of outside diameter
V_{Dsp}
range of sizes (3.3.6) derived from *two-point sizes* (3.3.1) of outside diameters in any cross-section of an outer ring or housing washer cylindrical outside surface

Note 1 to entry: For more information about any cross-section, see ISO 14405-1:2016, 7.4[13].

3.1.3.3
deviation of outside diameter
Δ_{Ds}
deviation (3.3.7) of a *two-point size* (3.3.1) outside diameter of an outer ring cylindrical outside surface

3.1.3.4
deviation of outside diameter of outer ring flange
Δ_{D1s}
deviation (3.3.7) of a *two-point size* (3.3.1) outside diameter of an outer ring flange cylindrical outside surface

3.1.3.5
deviation of mid-range outside diameter
Δ_{Dmp}
deviation (3.3.7) of the *mid-range size* (3.3.5 outside diameter [out of *two-point size* (3.3.1) outside diameters] in any cross-section of an outer ring or housing washer cylindrical outside surface

Note 1 to entry: For more information about any cross-section, see ISO 14405-1:2016, 7.4[13].

STANDARDSISO.COM : Click to view the full PDF of ISO 22872:2024

© ISO 2024 – All rights reserved

3.1.4 Widths of inner and outer rings

3.1.4.1
range of inner ring width with faces offset or narrow
V_{Bgp}
range of sizes (3.3.6) derived from *minimum circumscribed sizes* (3.3.3) of inner ring widths, between two opposite lines, obtained in any longitudinal section which includes the inner ring bore axis

Note 1 to entry: This term applies particularly to rings having offset faces areas according to ISO 14405-1:2016, 7.4[13], the size (characteristic) is defined as the (local) minimum circumscribed size in any longitudinal section defined between two extracted integral lines (the intersection of the extracted integral feature of size and an intersection half plane including a datum, which in this case is the inner ring bore axis) in a direction parallel to this datum (to avoid instability when the extent of the opposite areas is small).

3.1.4.2
range of inner ring width with faces directly opposite
V_{Bs}
range of sizes (3.3.6) derived from *two-point sizes* (3.3.1) of inner ring widths

3.1.4.3
range of outer ring width with faces offset or narrow
V_{Cgp}
range of sizes (3.3.6) derived from *minimum circumscribed sizes* (3.3.3) of outer ring widths, between two opposite lines, obtained in any longitudinal section which includes the outer ring outside surface axis

Note 1 to entry: This term applies particularly to rings having offset faces areas according to ISO 14405-1:2016, 7.4[13], the size (characteristic) is defined as the (local) minimum circumscribed size in any longitudinal section defined between two extracted integral lines (the intersection of the extracted integral feature of size and an intersection half plane including a datum, which in this case is the outer ring outside surface axis) in a direction parallel to this datum (to avoid instability when the extent of the opposite areas is small).

3.1.4.4
range of outer ring width with faces directly opposite
V_{Cs}
range of sizes (3.3.6) derived from *two-point sizes* (3.3.1) of outer ring widths

3.1.4.5
range of outer ring flange width
V_{C1s}
range of sizes (3.3.6) derived from *two-point sizes* (3.3.1) of outer ring flange widths

3.1.4.6
deviation of inner ring width with faces offset or narrow
Δ_{Bgp}
deviation (3.3.7) of the *minimum circumscribed size* (3.3.3) inner ring width, between two opposite lines, in any longitudinal section which includes the inner ring bore axis

Note 1 to entry: This term applies particularly to rings having offset faces areas according to ISO 14405-1:2016, 7.4[13], the size (characteristic) is defined as the (local) minimum circumscribed size in any longitudinal section defined between two extracted integral lines (the intersection of the extracted integral feature of size and an intersection half plane including a datum, which in this case is the inner ring bore axis) in a direction parallel to this datum (to avoid instability when the extent of the opposite areas is small).

3.1.4.7
deviation of inner ring width with faces directly opposite
deviation of inner ring width with faces offset or narrow
Δ_{Bs}
deviation (3.3.7) of a *two-point size* (3.3.1) inner ring width

Note 1 to entry: This term is applied to upper and lower limit deviations for an inner ring width with faces directly opposite, and lower limit deviation for an inner ring width with faces offset or narrow.

STANDARDSISO.COM : Click to view the full PDF of ISO 22872:2024

© ISO 2024 – All rights reserved

3.1.4.8
deviation of outer ring width with faces offset or narrow
Δ_{Cgp}
deviation (3.3.7) of the *minimum circumscribed size* (3.3.3) outer ring width, between two opposite lines, in any longitudinal section which includes the outer ring outside surface axis

Note 1 to entry: This term applies particularly to rings having offset faces areas according to ISO 14405-1:2016, 7.4[13], the size (characteristic) is defined as the (local) minimum circumscribed size in any longitudinal section defined between two extracted integral lines (the intersection of the extracted integral feature of size and an intersection half plane including a datum, which in this case is the outer ring outside surface axis) in a direction parallel to this datum (to avoid instability when the extent of the opposite areas is small).

3.1.4.9
deviation of outer ring width with faces directly opposite
deviation of outer ring width with faces offset or narrow
Δ_{Cs}
deviation (3.3.7) of a *two-point size* (3.3.1) outer ring width

Note 1 to entry: This term is applied to upper and lower limit deviations for an outer ring width with faces directly opposite, and lower limit deviation for an outer ring width with faces offset or narrow.

3.1.4.10
deviation of outer ring flange width
Δ_{C1s}
deviation (3.3.7) of a *two-point size* (3.3.1) outer ring flange width

3.1.5 Washer thickness

3.1.5.1
range of housing washer raceway thickness
S_e
<thrust ball bearing> *range of sizes* (3.3.6) derived from *minimum sizes* (3.3.4) of *spherical sizes* (3.3.2) between the raceway and the opposite back face of the housing washer, obtained in any longitudinal section which includes the housing washer outside surface axis

Note 1 to entry: For more information about any longitudinal section, see ISO 14405-1:2016, 7.4[13].

Note 2 to entry: This term applies only to thrust ball bearings with 90° contact angle.

3.1.5.2
range of housing washer raceway thickness
S_e
<thrust cylindrical roller bearing> *range of sizes* (3.3.6) derived from *two-point sizes* (3.3.1) of thicknesses between the housing washer raceway and the back face

Note 1 to entry: This term applies only to thrust cylindrical roller bearings with 90° contact angle.

3.1.5.3
range of shaft washer raceway thickness
S_i
<thrust ball bearing> *range of sizes* (3.3.6) derived from *minimum sizes* (3.3.4) of *spherical size* (3.3.2) between the raceway and the opposite back face of the shaft washer, obtained in any longitudinal section which includes the shaft washer bore axis

Note 1 to entry: For more information about any longitudinal section, see ISO 14405-1:2016, 7.4[13].

Note 2 to entry: This term applies only to thrust ball bearings with 90° contact angle.

STANDARDSISO.COM : Click to view the full PDF of ISO 22872:2024

© ISO 2024 – All rights reserved

3.1.5.4
range of shaft washer raceway thickness
S_i
<thrust cylindrical roller bearing> *range of sizes* (3.3.6) derived from *two-point sizes* (3.3.1) of thicknesses between the shaft washer raceway and the back face

Note 1 to entry: This term applies only to thrust cylindrical roller bearings with 90° contact angle.

3.1.6 Assembled bearing section height

3.1.6.1
range of section height at outer ring of assembled bearing
K_{ea}
range of sizes (3.3.6) derived from *two-point sizes* (3.3.1) of section heights between inner ring bore surface and outer ring outside surface of an *assembled bearing* (3.3.9) in any cross-section parallel to an intersection plane which is perpendicular to datum, i.e. axis, established from the inner ring bore

Note 1 to entry: For more information about any cross-section, see ISO 14405-1:2016, 7.4[13].

Note 2 to entry: The requirement applies at any specific location of the outer ring for any location of the inner ring in relation to the direction of gravity where the rolling elements are in correct functional contact with both the inner and outer ring raceways.

Note 3 to entry: The part with tolerance indications is considered as a moveable part and the part with datum indications is considered as a fixed part, see ISO/TS 17863:2013, Clause 5[15].

3.1.6.2
range of section height at inner ring of assembled bearing
K_{ia}
range of sizes (3.3.6) derived from *two-point sizes* (3.3.1) of section heights between outer ring outside surface and inner ring bore surface of an *assembled bearing* (3.3.9) in any cross-section parallel to an intersection plane which is perpendicular to a datum, i.e. axis, established from the outer ring outside surface

Note 1 to entry: For more information about any cross-section, see ISO 14405-1:2016, 7.4[13].

Note 2 to entry: The requirement applies at any specific location of the inner ring for any location of the outer ring in relation to the direction of gravity where the rolling elements are in correct functional contact with both the inner and outer ring raceways.

Note 3 to entry: The part with tolerance indications is considered as a moveable part and the part with datum indications is considered as a fixed part, see ISO/TS 17863:2013, Clause 5[15].

3.1.7 Assembled bearing height or width

3.1.7.1
deviation of the actual bearing height
Δ_{Tg}
<single-direction thrust bearing> *deviation* (3.3.7) of the *minimum circumscribed size* (3.3.3) of an *assembled bearing* (3.3.9) height

3.1.7.2
deviation of the actual bearing width
Δ_{Tg}
<tapered roller bearing> *deviation* (3.3.7) of the *minimum circumscribed size* (3.3.3) of an *assembled bearing* (3.3.9) width

3.1.7.3
deviation of the actual bearing height
Δ_{T1g}
<double-direction thrust bearing> *deviation* (3.3.7) of the *minimum circumscribed size* (3.3.3) of an *assembled bearing* (3.3.9) height

STANDARDSISO.COM : Click to view the full PDF of ISO 22872:2024

© ISO 2024 – All rights reserved

3.1.7.4
deviation of the actual effective width of inner subunit with master outer ring
Δ_{T1g}
<tapered roller bearing> *deviation* (3.3.7) of the *minimum circumscribed size* (3.3.3) of an effective width of a *moveable assembly* (3.3.9) consisting of an inner subunit and a master outer ring

3.1.7.5
deviation of the actual effective width of outer ring with master inner subunit
Δ_{T2g}
deviation (3.3.7) of the *minimum circumscribed size* (3.3.3) of an effective width of a *moveable assembly* (3.3.9) consisting of an outer ring and a master inner subunit

3.1.7.6
deviation of the actual flanged bearing width
Δ_{TFg}
deviation (3.3.7) of the *minimum circumscribed size* (3.3.3) of a width between a flange back face and a back face of a bearing inner ring of a moveable *assembly* (3.3.9)

3.1.7.7
deviation of the actual effective width of flanged outer ring with master inner subunit
Δ_{TF2g}
deviation (3.3.7) of the *minimum circumscribed size* (3.3.3) of an effective width of a *moveable assembly* (3.3.9) consisting of a flanged bearing outer ring and a master inner subunit

3.2 Terms related to geometrical specifications

3.2.1 Rings

3.2.1.1
run-out of inner ring face to the bore
S_d
axial circular run-out of inner ring face with respect to datum, i.e. axis, established from the inner ring bore

Note 1 to entry: For more information about axial circular run-out, see ISO 1101:2017, 17.16.3[7].

3.2.1.2
perpendicularity of outer ring outside surface to the face
S_D
perpendicularity of outer ring outside surface median line with respect to datum established from the outer ring face

Note 1 to entry: For more information about perpendicularity, see ISO 1101:2017, 17.11.4[7].

3.2.1.3
perpendicularity of outer ring outside surface to the flange back face
S_{D1}
perpendicularity of outer ring outside surface median line with respect to datum established from the outer ring flange back face

Note 1 to entry: For more information about perpendicularity, see ISO 1101:2017, 17.11.4[7].

3.2.2 Assembled radial bearings

3.2.2.1
axial run-out of outer ring of assembled bearing
S_{ea}
axial circular run-out of outer ring face of *assembled bearing* (3.3.9) with respect to datum, i.e. axis, established from the inner ring bore

Note 1 to entry: For more information about axial circular run-out, see ISO 1101:2017, 17.16.3[7].

STANDARDSISO.COM : Click to view the full PDF of ISO 22872:2024

© ISO 2024 – All rights reserved

Note 2 to entry: The part with tolerance indications is considered as a moveable part and the part with datum indications is considered as a fixed part, see ISO/TS 17863:2013, Clause 5[15].

3.2.2.2
axial run-out of outer ring flange back face of assembled bearing
S_{ea1}
axial circular run-out of outer ring flange back face of *assembled bearing* (3.3.9) with respect to datum. i.e. axis, established from the inner ring bore

Note 1 to entry: For more information about axial circular run-out, see ISO 1101:2017, 17.16.3[7].

Note 2 to entry: The part with tolerance indications is considered as a moveable part and the part with datum indications is considered as a fixed part, see ISO/TS 17863:2013, Clause 5[15].

3.2.2.3
axial run-out of inner ring of assembled bearing
S_{ia}
axial circular run-out of inner ring face of an *assembled bearing* (3.3.9) with respect to datum, i.e. axis, established from the outer ring outside surface

Note 1 to entry: For more information about axial circular run-out, see ISO 1101:2017, 17.16.3[7].

Note 2 to entry: The part with tolerance indication is considered as a moveable part and the part with datum indication is considered as a fixed part, see ISO/TS 17863:2013, Clause 5[15].

3.3 Terms related to geometrical product specifications

3.3.1
two-point size
<local size> distance between two opposite points on an extracted integral linear feature of size

[SOURCE: ISO 14405-1:2016, 3.6.1[13]]

3.3.2
spherical size
<local size> diameter of the maximum inscribed sphere

[SOURCE: ISO 14405-1:2016, 3.6.4[13]]

3.3.3
minimum circumscribed size
direct global size for which an associated integral feature is established from the extracted integral feature(s) with the minimum circumscribed criterion

[SOURCE: ISO 14405-1:2016, 3.7.1.3[13]]

3.3.4
minimum size
rank-order size defined as the minimum of the set of values of a local size along and/or around the toleranced feature

[SOURCE: ISO 14405-1:2016, 3.7.2.2.2[13]]

3.3.5
mid-range size
rank-order size defined as the mean of the maximum and the minimum of the set of values of a local size along and/or around the toleranced feature

[SOURCE: ISO 14405-1:2016, 3.7.2.2.5[13]]

STANDARDSISO.COM : Click to view the full PDF of ISO 22872:2024

© ISO 2024 – All rights reserved

3.3.6
range of sizes
rank-order size defined as the difference between the maximum and the minimum of the set of values of a local size along and/or around the toleranced feature

[SOURCE: ISO 14405-1:2016, 3.7.2.2.6[13]]

3.3.7
deviation
value minus its reference value

Note 1 to entry: For size deviations, the reference value is the nominal size and the value is the actual size.

[SOURCE: ISO 286-1:2010, 3.2.4[4]]

3.3.8
limit deviation
upper limit deviation or lower limit deviation from nominal size

[SOURCE: ISO 286-1:2010, 3.2.5[4]]

3.3.9
moveable assembly
assembled bearing
assembly of two or more parts where the parts can be moved relative to each other

Note 1 to entry: For more information about the usage of gravity, mobility and flag, see Figure 3.

[SOURCE: ISO/TS 17863:2013, 3.1[15], modified — "assembled bearing" has been added as a preferred term and Note 1 to entry has been added.]

4 Symbols

4.1 General

Figures 1 to 3 and Figures A.1 to A.16 provide examples to illustrate the layout of symbols described in Tables 1 and 2.

4.2 Symbols for physical quantities

Symbols in Table 1 represent physical quantities in the GPS environment and can sometimes be applied to more than one physical quantity.

Symbols for tolerance values, limit deviations and limit values shall be preceded by letter "*t*" in figures and tables. The letter "*t*" is written in italics type markup. The symbol group shall be subscripted to "*t*" with all descriptors in upright type.

EXAMPLE 1 $t_{\Delta \mathrm{Bs}}$, t_{Vdmp}.

Symbols for nominal dimensions and values of upper or lower limit of size are not preceded by the letter "*t*", because those values are usually interpreted as nominal dimensions.

EXAMPLE 2 *C*, *D*.

STANDARDSISO.COM : Click to view the full PDF of ISO 22872:2024

© ISO 2024 – All rights reserved

Table 1 — Symbols for dimensions and tolerance values

Symbol	Description	Figure(s)	Term entry
B	Nominal inner ring width	1, A.1, A.3, A.11	3.1.1.1
B_1	Nominal part width	A.5, A.9, A.12	
C	Nominal outer ring width	1, A.1, A.11	3.1.1.2
D	Nominal outside diameter	1, 2, 3, A.1, A.9, A.11, A.12, A.13, A.14, A.15, A.16	3.1.1.4
d	Nominal bore diameter	1, 2, 3, A.1, A.2, A.6, A.7, A.8, A.9, A.10, A.11, A.12	3.1.1.6
r_0	Filet radius at bottom of retaining slot	A.16	
t_{Kea}	Tolerance value for range of section height at outer ring of assembled bearing	3, A.13, A.14	3.1.6.1
t_{Kia}	Tolerance value for range of section height at inner ring of assembled bearing	3, A.6, A.8, A.10, A.11	3.1.6.2
t_{Ra}	Upper tolerance limit value of the profile surface texture	A.15	
t_{SD}	Tolerance value for perpendicularity of outer ring outside surface to the face	2, A.14	3.2.1.2
t_{Sd}	Tolerance value for run-out of inner ring face to the bore	2, A.10	3.2.1.1
t_{Sea}	Tolerance value for axial run-out of outer ring of assembled bearing	3	3.2.2.1
t_{Sia}	Tolerance value for axial run-out of inner ring of assembled bearing	3, A.10	3.2.2.3
t_{VBgp}	Tolerance value for range of inner ring width faces offset or narrow	A.10, A.11	3.1.4.1
t_{VBs}	Tolerance value for range of inner ring width faces directly opposite	1, A.6, A.10, A.11	3.1.4.2
t_{VCs}	Tolerance value for range of outer ring width faces directly opposite	1	3.1.4.4
t_{VDmp}	Tolerance value for range of mid-range outside diameter	1, A.13, A.14	3.1.3.1
t_{Vdmp}	Tolerance value for range of mid-range bore diameter	1, A.4, A.6, A.8, A.10, A.11	3.1.2.1
t_{VDsp}	Tolerance value for range of outside diameter	1, A.13, A.14	3.1.3.2
t_{Vdsp}	Tolerance value for range of bore diameter	1, A.6, A.8, A.10, A.11	3.1.2.2
$t_{\Delta Bgp}$	Upper limit deviation of inner ring width with faces offset or narrow	A.3, A.7, A.10, A.11	3.1.4.6
$t_{\Delta Bs}$	Upper and lower limit deviations of inner ring width with faces directly opposite or lower limit deviation of inner ring width with faces offset or narrow	1, A.1, A.3, A.6, A.7, A.10, A.11	3.1.4.7
$t_{\Delta Cs}$	Upper and lower limit deviations of outer ring width with faces directly opposite	1, A.1, A.11	3.1.4.9
$t_{\Delta Dmp}$	Upper and lower limit deviations of mid-range outside diameter	1, A.1, A.13, A.14	3.1.3.5
$t_{\Delta dmp}$	Upper and lower limit deviations of mid-range bore diameter <cylindrical bore>	1, A.1, A.2, A.6, A.8, A.10, A.11	3.1.2.5
$t_{\Delta Ds}$	Upper and lower limit deviations of outside diameter	1	3.1.3.3
$t_{\Delta ds}$	Upper and lower limit deviations of bore diameter	1	3.1.2.4

4.3 Additional symbols

Symbols defined in other standards and used in this document are presented in Table 2 for information. Table 2 includes symbols for specification modifiers, complementary specification modifiers and geometrical characteristics.

STANDARDSISO.COM : Click to view the full PDF of ISO 22872:2024

© ISO 2024 – All rights reserved

Table 2 — Additional symbols defined in other documents

Symbol	Description	Figure(s)	Reference
ACS	Any cross-section	1, 3, A.1, A.2, A.4, A.6, A.8, A.10, A.11, A.13	ISO 14405-1:2016, 7.4[13]
GN	Minimum circumscribed size	A.3, A.7	ISO 14405-1:2016, 3.7.1.3[13]
LP	Two-point size	A.3, A.7	ISO 14405-1:2016, 3.6.1[13]
SD	Mid-range size	1, A.1, A.2, A.4, A.6, A.8, A.10, A.11, A.13	ISO 14405-1:2016, 3.7.2.2.5[13]
SR	Range of sizes	1, 3, A.4, A.8, A.13	ISO 14405-1:2016, 3.7.2.2.6[13]
↗	Circular run-out	2, 3	ISO 1101:2017, 17.16[7]
⊥	Perpendicularity	2, 3, A.14	ISO 1101:2017, 17.11[7]
⊥ K [a]	Intersection plane indicator	3	ISO 1101:2017, Clause 13[7]
FP	Fixed part	3	ISO/TS 17863:2013, 6.10.1.1[15]
MP	Moveable part	3	ISO/TS 17863:2013, 6.10.1.1[15]
G	Gravity	3	ISO/TS 17863:2013, 6.3[15]
1 [a]	Flag	3	ISO/TS 17863:2013, 6.8 and 6.9[15]
a	Distance from face to define the restricted area for S_D	2	

[a] Letters and characteristics symbol are examples.

5 Graphic description

To express that the ISO GPS system (see ISO 8015[12]) is applied, the dimensional and geometrical characteristics shall be included in the technical product documentation (e.g. on the drawing). The dimensional and geometrical specifications associated to these characteristics are described in Figures 1 to 3.

Specifications shall be completed with specification operators, e.g. filtration. For more information, see ISO 8015[12]. These can be agreed between the manufacturer and the customer on a case-by-case basis.

Figures 1 to 3 are examples for visualization of the principle.

NOTE 1 Figures 1 to 3 are drawn schematically and do not necessarily show all design details.

STANDARDSISO.COM : Click to view the full PDF of ISO 22872:2024

© ISO 2024 – All rights reserved

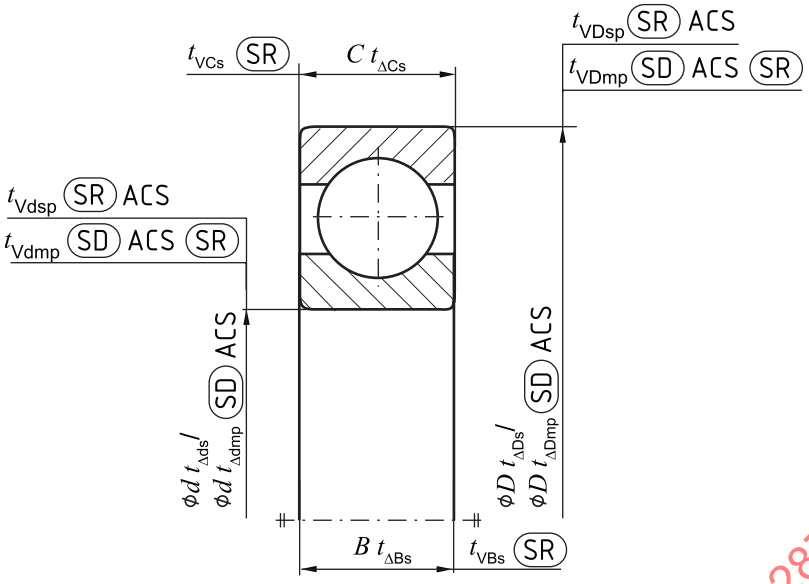

NOTE 2 The symbol "/" (forward slash) shows alternative specification indications depending on tolerance class and diameter series.

Figure 1 — Dimensional tolerancing for single components of bearing with cylindrical bore and symmetrical rings

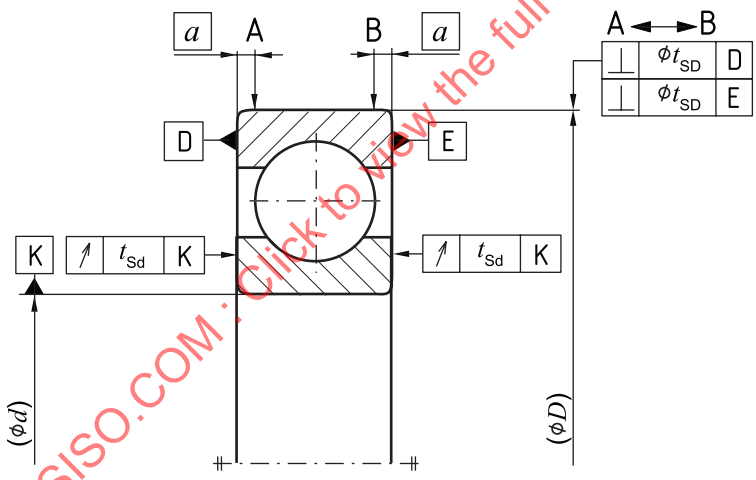

Figure 2 — Geometrical tolerancing for single components of bearing with cylindrical bore

STANDARDSISO.COM : Click to view the full PDF of ISO 22872:2024

© ISO 2024 – All rights reserved

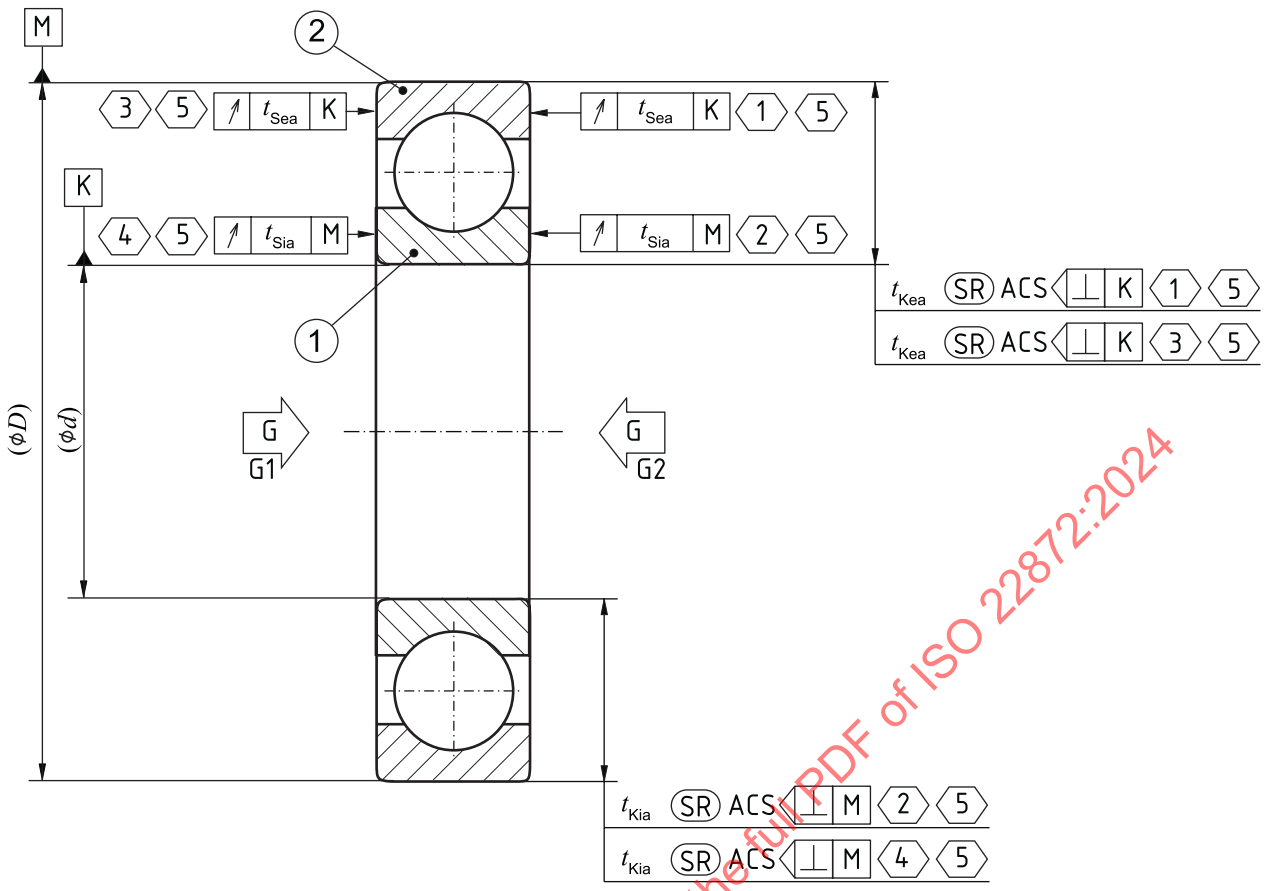

Key

1 = FP 1 – MP 2, G2

2 = FP 2 – MP 1, G2

3 = FP 1 – MP 2, G1

4 = FP 2 – MP 1, G1

5 = The rolling elements shall be in correct functional contact with both the inner and outer ring raceways.

Figure 3 — Dimensional and geometrical tolerancing for an assembled bearing with cylindrical bore

STANDARDSISO.COM : Click to view the full PDF of ISO 22872:2024

© ISO 2024 – All rights reserved

Annex A
(informative)

Representation of geometrical product specifications

A.1 General

GPS indications were prepared in a proper way, but it was identified that different solutions were applied to transform GPS specifications into figures and tables. The common representation of GPS is essential to avoid different interpretation in different standards in the field of rolling bearings.

This annex provides rules for the representation of symbols, tolerance values, limits of size, limit deviations and limit values for rolling bearings derived from GPS indications according to, for example, ISO 1101[7], ISO 14405-1[13] and ISO 21920-1[14] as indicated on technical drawings.

This annex does not give guidelines on how to develop appropriate GPS indications.

A.2 Preparation of figures based on technical drawings

Figures including GPS indications should be prepared as technical drawings, i.e. the indications should follow drawing rules such as those specified in the ISO 128 series[1], ISO 129-1[2] and other GPS standards such as ISO 1101[7], ISO 14405-1[13] and ISO 21920-1[14], see Figure A.1 a).

In figures, the numerical values should be exchanged by symbols according to this document, wherever possible, see Figure A.1 b). In the examples of this annex, numerical sizes are expressed in millimetres and tolerances values are expressed in micrometres.

When the same GPS modifier is indicated for upper and lower limits, only one symbol should be indicated, see Figure A.1 and Figure A.2. When multiple GPS modifiers are indicated for upper and lower limits, two different symbols should be indicated, see Figure A.3.

The symbols for tolerance values, limit deviations and limit values should be preceded by letter "*t*", see Figures A.2 to A.4. For values of upper or lower limit of size, the letter "*t*" should not be indicated, see Figure A.5 and A.9, because in the context of rolling bearings, those values are usually interpreted as nominal dimensions.

For surface texture definitions, the numerical limit value should be symbolized by letter "*t*" followed by the indicator for the surface texture parameter, see Figure A.15.

STANDARDSISO.COM : Click to view the full PDF of ISO 22872:2024

© ISO 2024 – All rights reserved

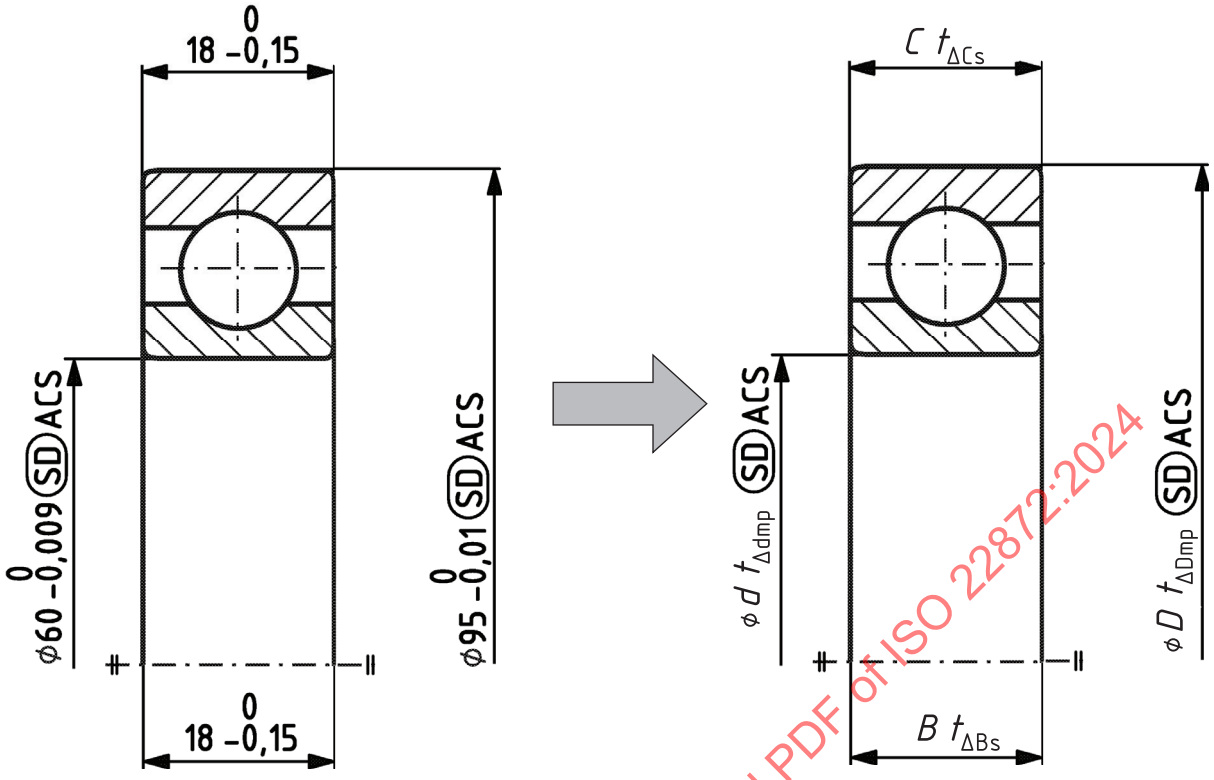

a) Indication in technical drawings

b) Symbolic indications

Figure A.1 — Example of a GPS figure preparation

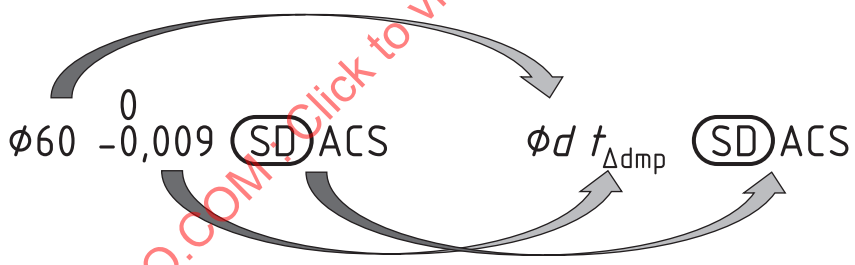

Figure A.2 — Transformation in the case of a single GPS modifier

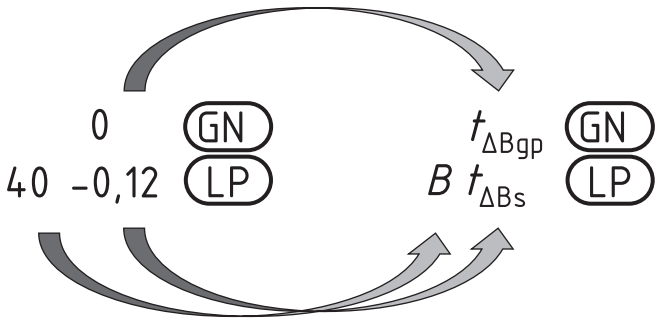

Figure A.3 — Transformation in the case of multiple GPS modifiers

STANDARDSISO.COM : Click to view the full PDF of ISO 22872:2024

© ISO 2024 – All rights reserved

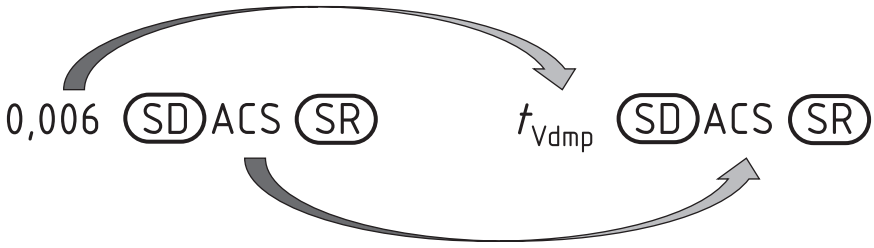

Figure A.4 — Transformation in the case of one numerical value

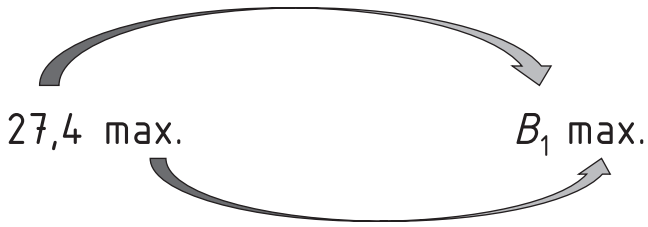

Figure A.5 — Transformation in the case of the upper or lower limit of size

STANDARDSISO.COM : Click to view the full PDF of ISO 22872:2024

A.3 Preparation of tables

The tables can include:

a) tolerance values, limit deviations, limit values, etc., depending on a nominal value;

b) nominal values only;

c) combined tables.

The tables should be written in the following formats:

— all values are in (unit) unless otherwise specified;

— table types a) and c) above are usually applied for standards which include GPS indications.

Figure 2 shows presentation of nominal feature symbols combined with signal italic "*t*" followed by suffixed tolerance symbols (see 4.2) which should be applied in the tables.

Supplementary GPS specification elements included in technical drawings and figures, for example, SD, SR, ACS, should not be included in the tables.

When the symbol represents two numerical values (see Figure A.1), both values should be presented side by side in different columns. In various GPS standards, different symbols for upper and lower limit deviations are applied. For harmonization, the symbols "U" and "L" (e.g. ISO 21920-1[14] and ISO 3534-2[10]) are applied in this document and in the field of rolling bearing documents:

— U: upper limit deviation;

— L: lower limit deviation.

The symbol should be indicated only once over both columns. The columns should be supplemented with the limit indications "U" and "L". "U" should be indicated to the left of "L" (see Figure A.6).

When multiple symbols are indicated for upper and lower limits (see Figure A.3), both symbols and their practical values should be prepared side by side in different columns. The columns should be supplemented with the limit indications "U" and "L". "U" should be indicated left of "L" (see Figure A.7).

© ISO 2024 – All rights reserved

When the symbol represents a single numerical value, the symbol should be indicated over the column without any limit indication, e.g. t_{Vdmp} and t_{Kia} (see Figure A.8).

When the symbol represents a single limit value for surface texture indication, the symbol should be indicated over the column without any limit indication (see Figure A.15).

When the symbol represents an upper or lower limit of size (i.e. max. or min. respectively), the supplementary indication "max." or "min." should be included in the tables (see Figure A.9).

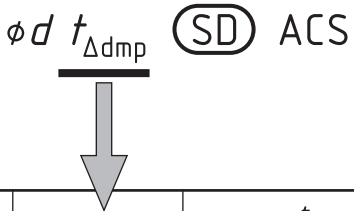

d mm		$t_{\Delta dmp}$		t_{Vdsp}			t_{Vdmp}	t_{Kia}	$t_{\Delta Bs}$			t_{VBs}
				Diameter series					**All**	**Normal**	**Modified**	
>	≤	U	L	9	0, 1	2, 3, 4			U	L		
—	0,6	0	−8	10	8	6	6	10	0	−40	—	12
0,6	2,5	0	−8	10	8	6	6	10	0	−40	—	12
2,5	10	0	−8	10	8	6	6	10	0	−120	−250	15
10	18	0	−8	10	8	6	6	10	0	−120	−250	20
18	30	0	−10	13	10	8	8	13	0	−120	−250	20

Figure A.6 — Application of symbols which represent two numerical values

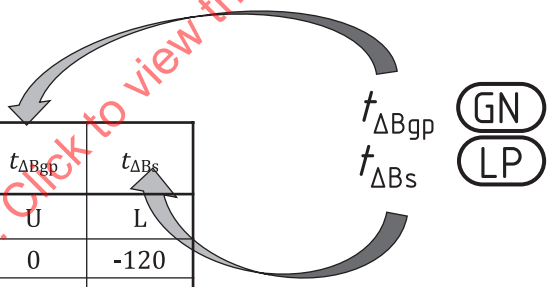

d mm		$t_{\Delta Bgp}$	$t_{\Delta Bs}$
>	≤	U	L
30	50	0	-120
50	80	0	-150
80	120	0	-200
120	180	0	-250

Figure A.7 — Application of symbols which represents different GPS modifiers for upper and lower limit deviations

STANDARDSISO.COM : Click to view the full PDF of ISO 22872:2024

© ISO 2024 – All rights reserved

t_{Vdmp} (SD) ACS (SR)

d mm		$t_{\Delta dmp}$		t_{Vdsp} Diameter series			t_{Vdmp}	t_{Kia}
>	≤	U	L	9	0, 1	2, 3, 4		
—	0,6	0	−8	10	8	6	6	10
0,6	2,5	0	−8	10	8	6	6	10
2,5	10	0	−8	10	8	6	6	10

Figure A.8 — Application of symbols which represents a single numerical value

B_1 max.

d mm	D mm	B_1 max.
12	40	27,4
15	40	27,4
20	47	31

Figure A.9 — Application of symbol which represents the upper or lower limit of size

The relation between figures and numerical values given in the table is also relevant in the case of technical drawing preparation based on the table, see example in Figure A.10.

ϕd $t_{\Delta dmp}$ (SD) ACS

$\phi 60 \; {}^{0}_{-0,009}$ (SD) ACS

d mm		$t_{\Delta dmp}$		t_{Vdsp} Diameter series			t_{Vdmp}	t_{Kia}	t_{Sd}	t_{Sia}	$t_{\Delta Bs}$ $t_{\Delta Bgp}$ All	Normal	Modified	t_{VBs} t_{VBgp}
>	≤	U	L	9	0, 1	2, 3, 4					U	L		
—	0,6	0	−5	5	4	4	3	4	7	7	0	−40	−250	5
0,6	2,5	0	−5	5	4	4	3	4	7	7	0	−40	−250	5
2,5	10	0	−5	5	4	4	3	4	7	7	0	−40	−250	5
10	18	0	−5	5	4	4	3	4	7	7	0	−80	−250	5
18	30	0	−6	6	5	5	3	4	8	8	0	−120	−250	5
30	50	0	−8	8	6	6	4	5	8	8	0	−120	−250	5
50	80	0	−9	9	7	7	5	5	8	8	0	−150	−250	6
80	120	0	−10	10	8	8	5	6	9	9	0	−200	−380	7

Figure A.10 — Relation between table and technical drawing

STANDARDSISO.COM : Click to view the full PDF of ISO 22872:2024

© ISO 2024 – All rights reserved